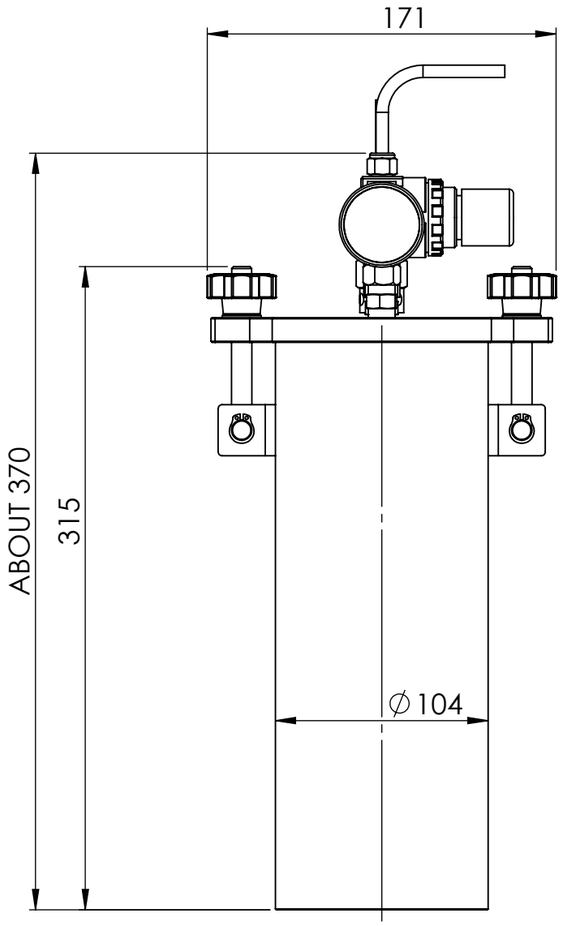

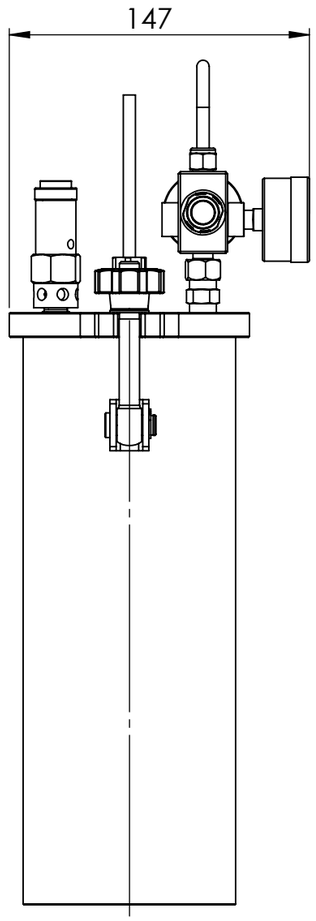

NOTE :

1. DIMENSIONS ARE IN mm

2. MATERIALS :
tank and cover : stainless steel 303/304 (316 OPTION)
dip tube :
output fittings : polypropylene
oring : Viton

3. MAXIMUM PRESSURE : 100 PSI (6.9 bar)
4. CAPACITY WITHOUT LINER : 2 LITRE
5. INSIDE DIMENSIONS : ∅100mm x 270mm DEEP
6. DRY WEIGHT :
7. DIMENSIONS ARE FOR REFERENCE ONLY
8. ALSO SUPPLIED :

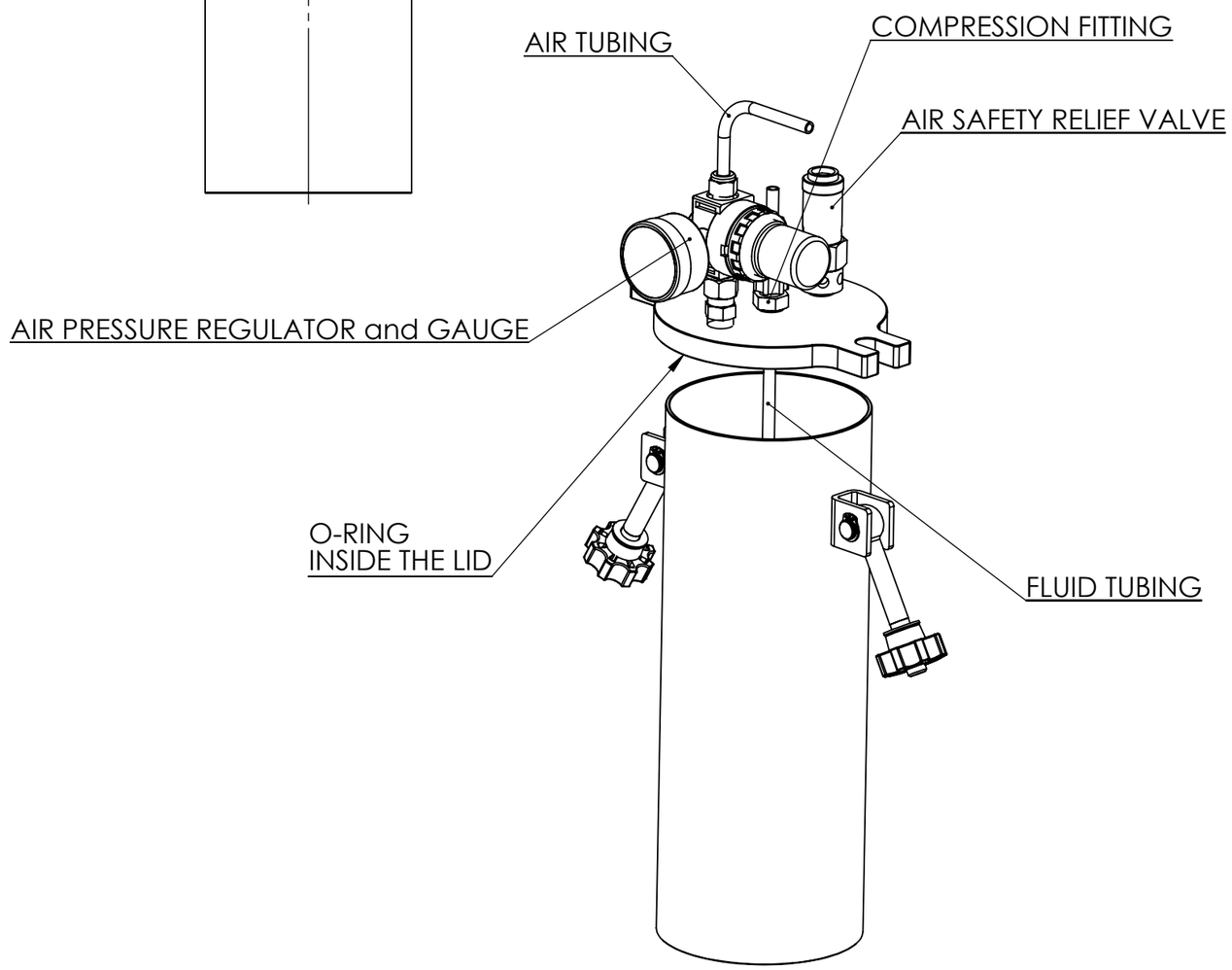

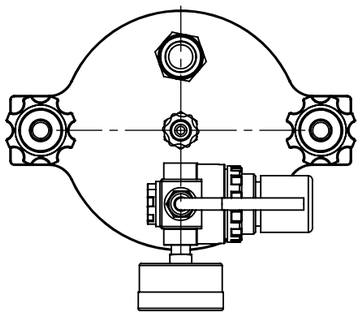

REVISION	INITIALS	DATE	MODIFICATIONS
A	NR	11.03.17	INITIAL ISSUE
B	NR	23.05.19	UPDATE OF VARIOUS MODELS TO FIT REALITY

This document must not be copied without our written permission, and the contents thereof must not be imparted to a third party nor be used for any unauthorised purpose. Contravention will be prosecuted.

GENERAL TOLERANCE
Unless otherwise stated

Linear: 0.0 +/- 0.25
Angular: 0.0 +/- 1º
Surface Roughness: Ra1.6

ISO STANDARD FOR
Thread class
external 6g
internal 6H
Geometric Tolerances

	NAME	DATE
DRAWN	NICOLAS REYNIER	11.03.2017
APPV'D	SIMON KAYE	

SR-TEK

MATERIAL:
STAINLESS STEEL

FINISH:
BRUSHED

DO NOT SCALE DRAWING

BREAK SHARP EDGES
WITH CHAMFER 0.3x45º

WEIGHT: 3.1 kg

TITLE:

2L RESERVOIR ASSY

DWG NO. 2000ML-ST
Revision B

A3

SCALE: 1:3

IF IN DOUBT ASK

SHEET 1 OF 2

#	PART NUMBER	DESCRIPTION	QTY
1	2011B	2L RESERVOIR BODY	1
2	1010L	1L & 2L RESERVOIR LID	1
3	OR-4.5-90	O-RING 90x4.5 VITON	1
4	1015	DOWEL PIN	2
5	HCIRCLIPEXT10	CIRCLIP EXTERNAL D10	2
6	BM10x75SSSWING	SWING BOLT M10	2
7	WM10-19SS	WASHER M10	2
8	70800.W0033	EIGHT LOBED KNOB M10 PLASTIC BRASS	2
9	HNIPPLE0.25	NIPPLE NPT 1/4"	1
10	HADAPTERF.25-M.125	1/8 MALE 1/4 FEMALE BSP NIPPLE ADAPTER	1
11	HREGULATORAIR100	AIR PRESSURE REGULATOR 0-100 PSI	1
12	AN-100-G	PRESSURE GAUGE 0-100PSI	1
13	HADAPTER0.125-6	STRAIGHT ADAPTOR G1/8 x 6mm	1
14	6PE-CL	FLUID TUBING 6mm CLEAR	1
15	FIT-0.25-COMP-6	COMPRESSION ADAPTER 1/4NPT 6mm	1
16	6PE-WH-2L	FLUID TUBING 6mm WHITE	1
17	100-SV	SAFETY VALVE 0.25 100PSI	1

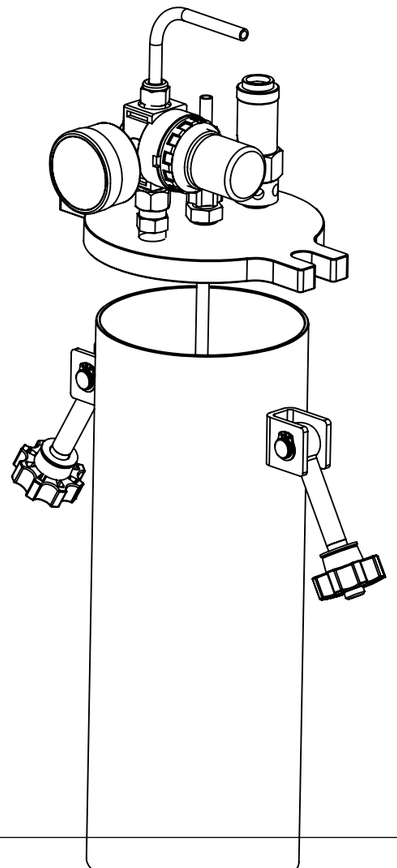

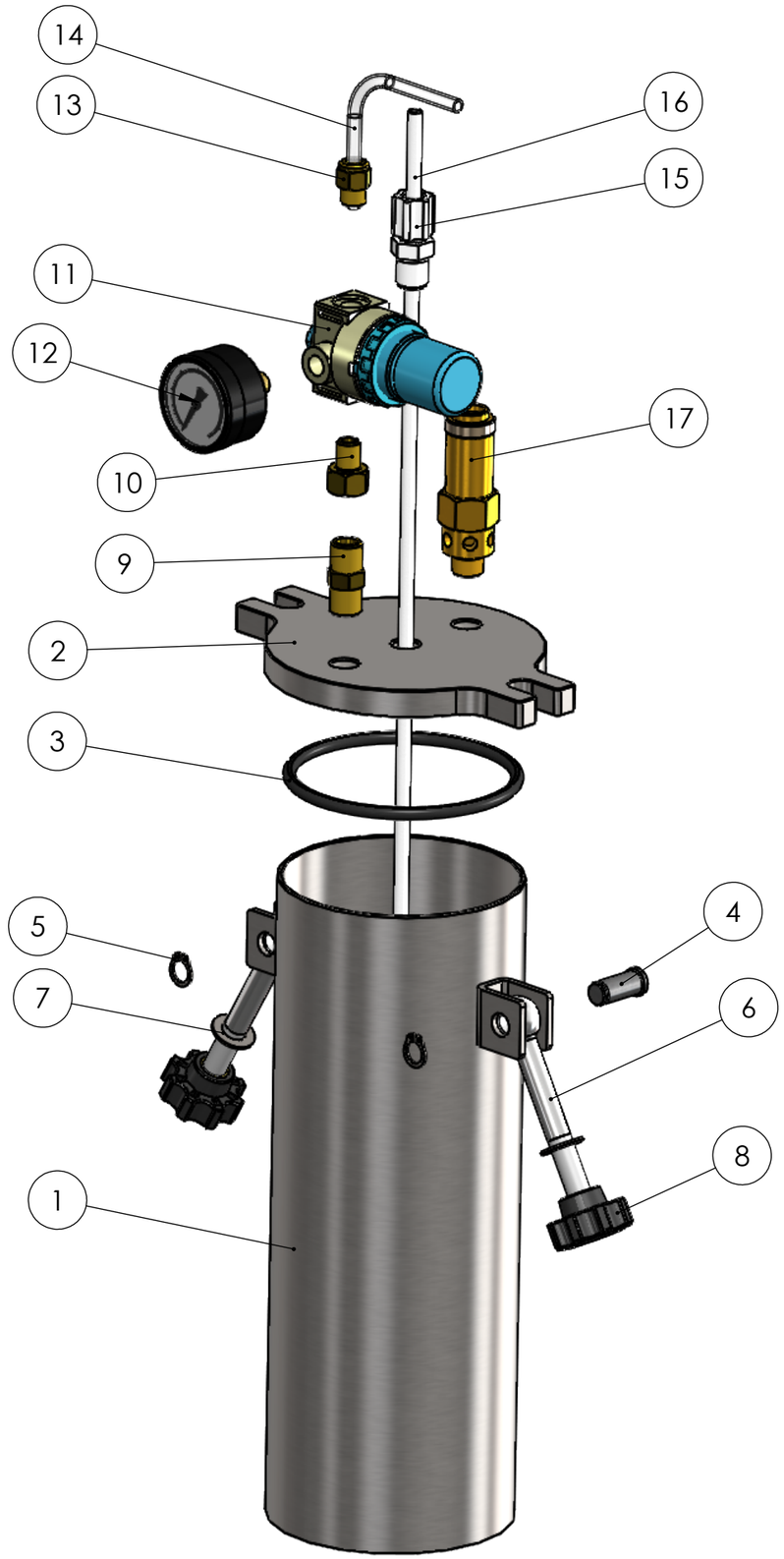

REVISION	INITIALS	DATE	MODIFICATIONS
A	NR	11.03.17	INITIAL ISSUE
B	NR	23.05.19	UPDATE OF VARIOUS MODELS TO FIT REALITY

This document must not be copied without our written permission, and the contents thereof must not be imparted to a third party nor be used for any unauthorised purpose. Contravention will be prosecuted.

GENERAL TOLERANCE
Unless otherwise stated

Linear: 0.0 +/- 0.25
Angular: 0.0 +/- 1º
Surface Roughness: Ra1.6

ISO STANDARD FOR

Thread class
external 6g
internal 6H
Geometric Tolerances

	NAME	DATE
DRAWN	NICOLAS REYNIER	11.03.17
APPV'D	SIMON KAYE	

SR-TEK

MATERIAL:
STAINLESS STEEL

FINISH:
BRUSHED

DO NOT SCALE DRAWING

BREAK SHARP EDGES WITH CHAMFER 0.3x45º

WEIGHT: 3.1 kg

TITLE:

2L RESERVOIR ASSEMBLY

DWG NO. 2000ML-ST Revision B

A3

SCALE: 1:2

IF IN DOUBT ASK

SHEET 2 OF 2